Balun

monofrequent

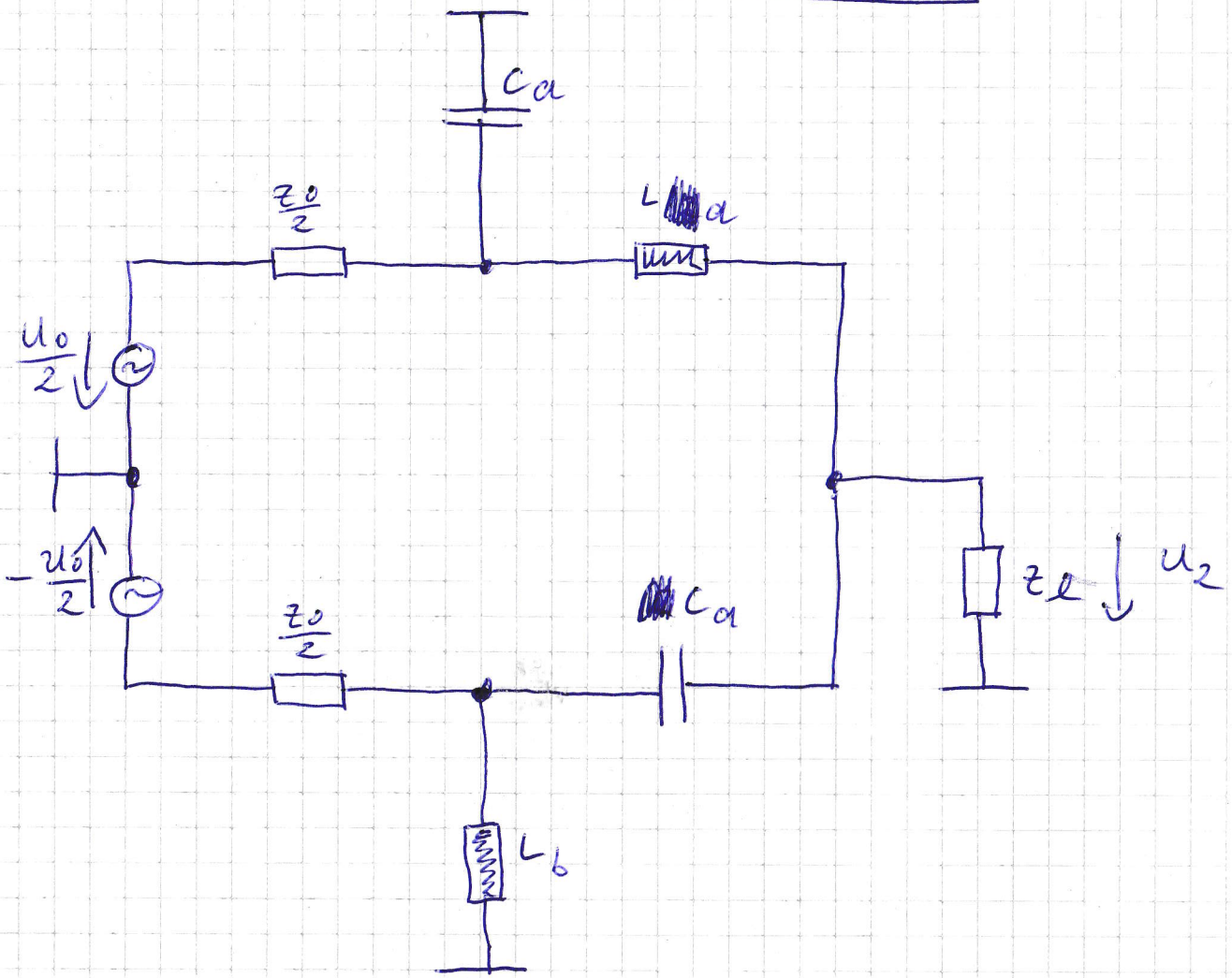

obere Zweig

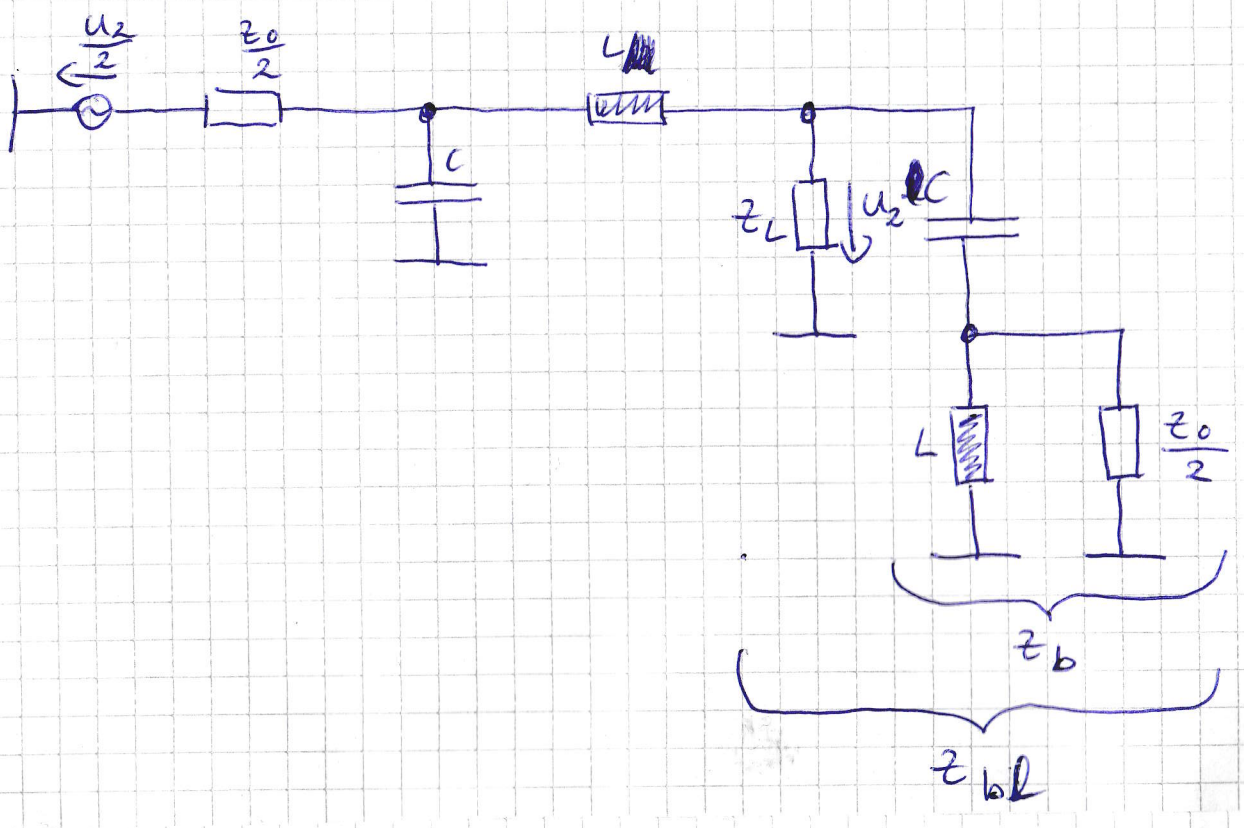

$$Z_b = \frac{1}{j\omega C} + \frac{1}{\frac{1}{j\omega L} + \frac{2}{Z_0}}$$

$$Z_{bL} = \frac{1}{\frac{1}{Z_L} + \frac{1}{Z_b}}$$

$$① \quad \frac{u_2}{u_0} = \frac{\frac{1}{2} Z_{bL}}{\frac{1}{\frac{1}{Z_{bL} + j\omega L}} + j\omega C} + \frac{Z_0}{2}$$

unterer Zweig

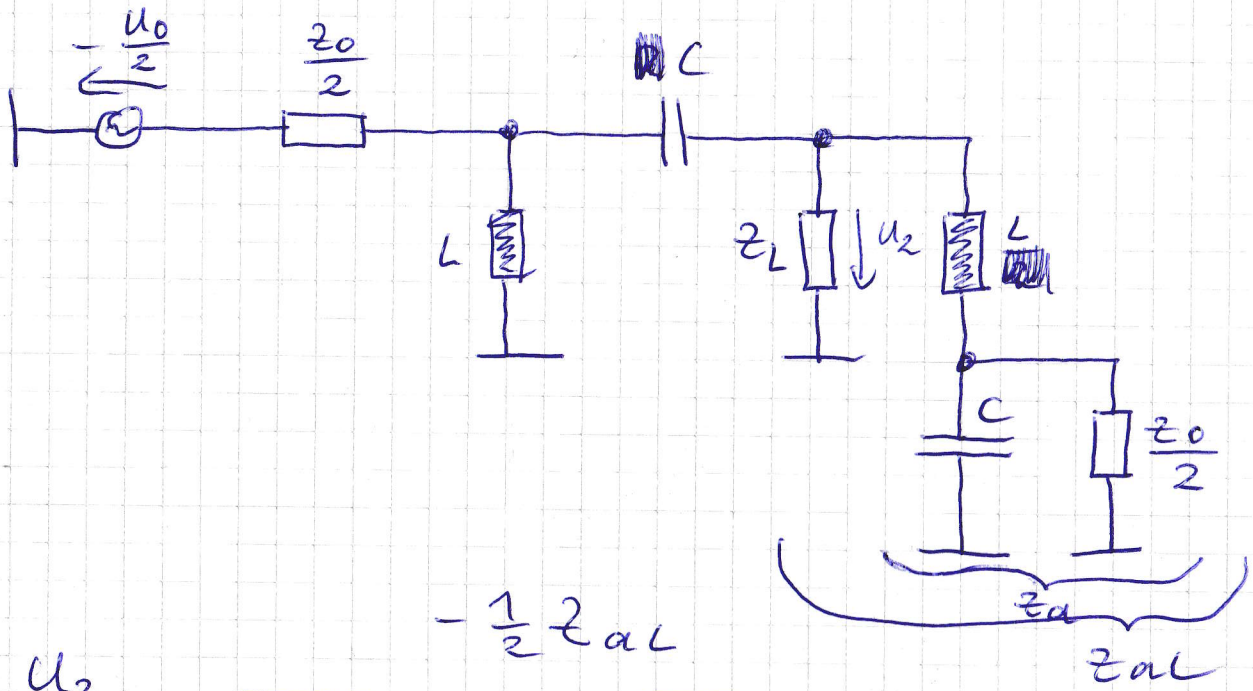

$$Z_a = j\omega L + \frac{1}{j\omega C + \frac{2}{Z_0}}$$

$$Z_{aL} = \frac{1}{\frac{1}{Z_L} + \frac{1}{Z_a}}$$

$$② \quad \frac{U_2}{U_0} = \frac{-\frac{1}{2} Z_{aL}}{\frac{1}{\frac{1}{Z_{aL} + \frac{1}{j\omega C}} + \frac{1}{j\omega L}} + \frac{Z_0}{2}}$$

$$\measuredangle \frac{U_2}{U_0}① = \measuredangle \frac{U_2}{U_0}② \sim C$$

$$z_{out} = \frac{1}{\frac{1}{z_a} + \frac{1}{z_b}}$$

Eingangsimpedanz

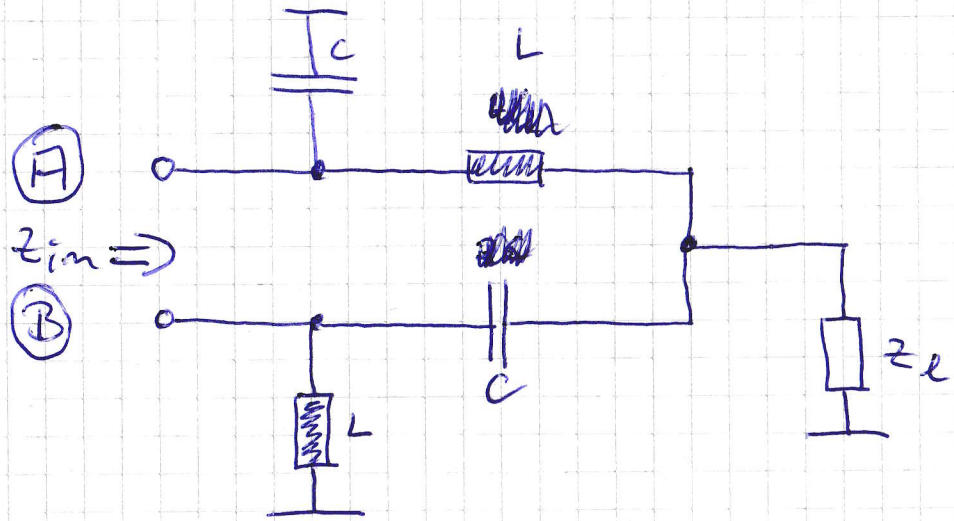

Brückenschaltung

siehe Wikipedia

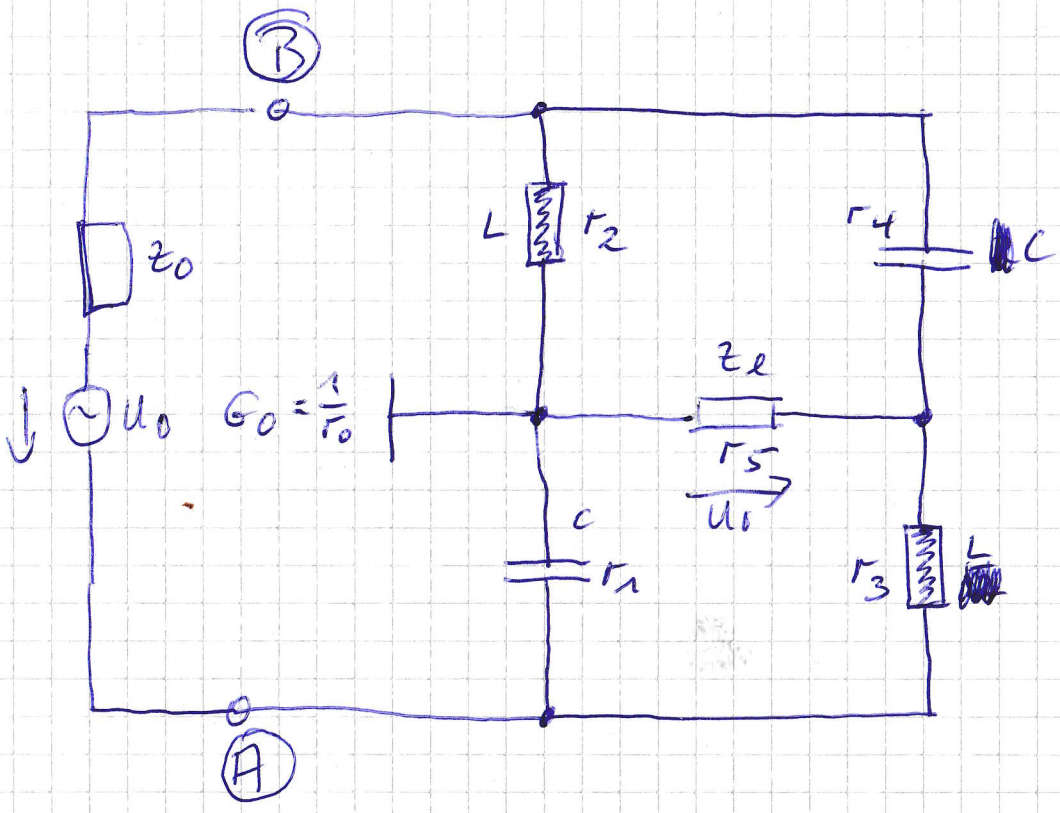

$$d_n = r_5 (r_1 + r_2)(r_3 + r_4) + r_1 r_2 (r_3 + r_4) + (r_1 + r_2) r_3 r_4$$

$$r_0 = \frac{d_n}{r_5 (r_1 + r_2 + r_3 + r_4) + (r_1 + r_3)(r_2 + r_4)}$$

$$\cancel{\frac{U_2}{U_0} = r_2 (r_3 r_5 + r_4 (r_1 + r_3 + r_5)) / d_n}$$

$$\cancel{= r_5 (r_1 r_4 - r_2 r_3) / d_n}$$

$$r_1 = r_4, \quad r_2 = r_3$$